Salzer Switch

Leeson 2 HP
model #112136

120 volt

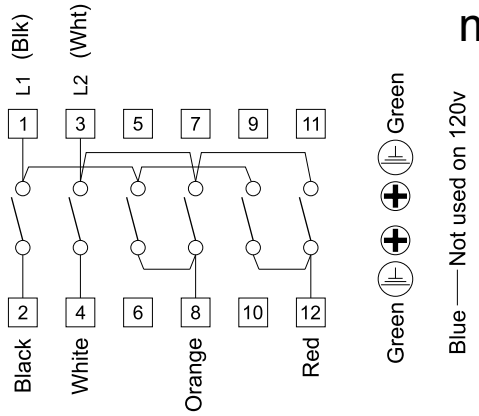

Motor connections

T-1
T-3
B-1
B-3 → Black

T-8 → Orange

T-5 → Red

T-2
T-4
B-2
B-4 → White

⊕ → Green

240 volt

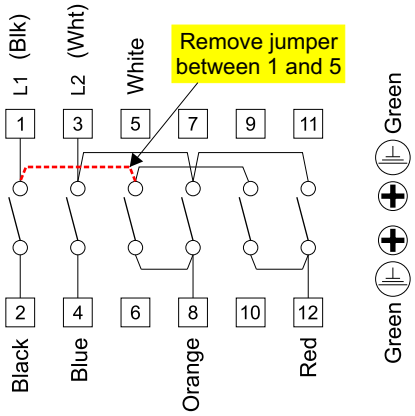

Motor connections

T-1
B-1 → Black

T-2
T-3 → White

T-8 → Orange

T-5 → Red

T-4
B-2 → Blue

B-3
B-4 → Join & Cap

⊕ → Green

T-5 & T-8 are rotation leads

6/11